Built-in dishwashers

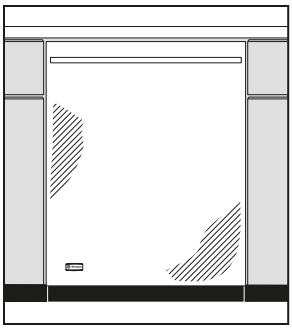

Bulk-dispense stainless steel dishwasher with xenon lighting and steam prewash

ZBD8920VSS*
ZBD8920DSS**

Overall dimensions (WxHxD in inches): 24 x 34–35 x 24	
Amps @120 Volts	9.1
Approx. shipping wt. (lbs.)	120

- Accepts custom toekick
- Exterior end-of-cycle indicator light

*Platinum racks
**Charcoal racks

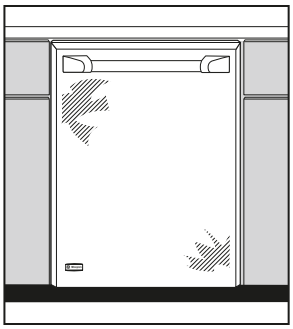

Custom panel dishwashers

ZBD8900VII and ZBD6900VII*
ZBD8900DII and ZBD6900DII**

Overall dimensions (WxHxD in inches): 24 x 34–35 x 24†	
Amps @120 Volts	9.1
Approx. shipping wt. (lbs.)	120

- A custom panel and handle are required
- Accepts custom toekick
- Accepts professional-style door/panel handle kit, ZPRO0700S
- Accepts ZTB700 stainless steel tubular handle*

*Platinum racks
**Charcoal racks
†24-3/4" with custom panel (not including handle)

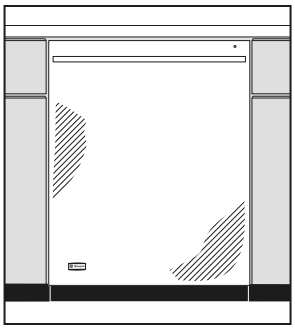

Stainless steel dishwasher with xenon lighting

ZBD7920VSS*
ZBD7920DSS**

Overall dimensions (WxHxD in inches): 24 x 34–35 x 24	
Amps @120 Volts	9.1
Approx. shipping wt. (lbs.)	120

- Accepts custom toekick
- Exterior end-of-cycle indicator light

*Platinum racks
**Charcoal racks

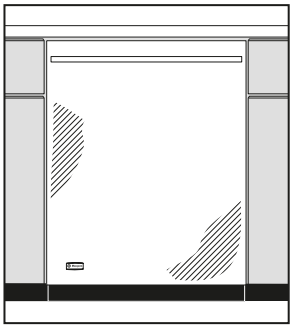

Stainless steel dishwasher

ZBD6920VSS*
ZBD6920DSS**

Overall dimensions (WxHxD in inches): 24 x 34–35 x 24	
Amps @120 Volts	9.1
Approx. shipping wt. (lbs.)	115

- Accepts custom toekick
- Exterior end-of-cycle indicator light

*Platinum racks
**Charcoal racks

General features

5-stage-filtration wash system. Multi-angle jet sprays and a high-heat steam option virtually eliminate the need for pre-rinsing.

Bulk-dispense technology. Holds an entire 47-oz. bottle of detergent, releasing the right amount throughout the wash cycle based on water hardness and soil level. (ZBD8920VSS/ZBD8920DSS and ZBD8900VII/ZBD8900DII models)

High-intensity xenon lights. These lights illuminate the entire interior, leaving no question as to whether or not dishes have been cleaned. (ZBD8920, ZBD8900 and ZBD7920 models)

Quiet operation as low as 48 dBA. Advanced sound-absorbing materials and a smooth-running motor provide quiet operation.

*Order this handle through GE Parts

ENERGY STAR

Advance planning for built-in dishwashers

Monogram® dishwashers are designed for versatility, adaptable to virtually any installation.

- These dishwashers may be installed beneath countertops of stone or other materials that will not accept screws. No kits required.

Supplied or custom toekick

- Depending on cabinetry style, a custom toekick can also be installed on all 24" dishwashers to match cabinetry. Care must be taken to assure door swing clearance above the toekick.

Electrical requirements

The dishwasher must be supplied with 120V, 60Hz, and connected to an individual properly grounded branch circuit protected by a 15- or 20-amp circuit breaker or time-delay fuse.

The installation space

The rough cabinet opening must be prepared to the dimensions shown.

- The dishwasher must be installed so that the drain hose is no more than 10' in length for proper drainage.
- Water and power supply should enter in the shaded area.
- Electrical and water connections are at the right front of the dishwasher. The hot water line should extend forward 30" to 40" from the rear wall. The electrical must extend forward at least 24" to reach the junction box.
- To prevent siphoning, an air gap must be used when the waste tee or disposer connection is less than 18" above the floor.

Monogram 24" dishwashers cutout dimensions and clearances

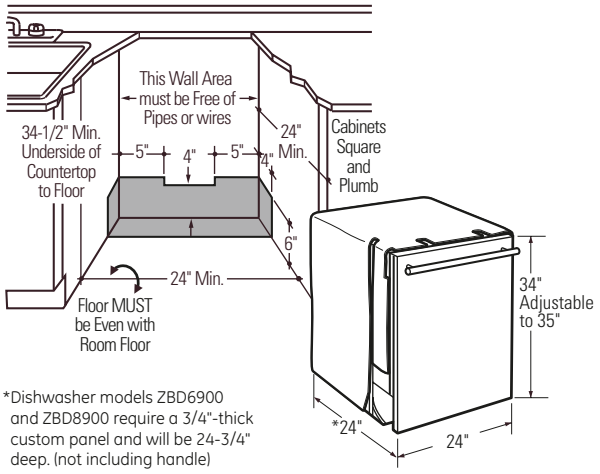

*Dishwasher models ZBD6900 and ZBD8900 require a 3/4"-thick custom panel and will be 24-3/4" deep. (not including handle)

The serial plate is located on the tub wall just inside the door.

Custom panels

Custom panel for fully integrated ZBD8900VII/ZBD8900DII and ZBD6900VII/ZBD6900DII dishwashers

These models require a field-installed 3/4"-thick custom panel and custom handle. An installation template is packed with these models and may be obtained in advance. Order Pub. No. 31-30569-1. Complete panel installation instructions are included on the template.

Custom panel size requirements

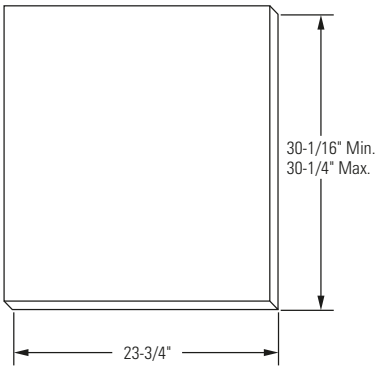

NOTE: Maximum door panel weight is 14 pounds

HEIGHT:

Panel height must be between 30-1/16" and 30-1/4"

- If the panel height is more than 30-1/4", it will prevent the door from swinging open.
- If the panel height is less than 30-1/16", it will not cover the dishwasher door frame.
- The top of the custom panel must be flush with the top of the door. A 1/2" minimum gap between the top of the door and the bottom of the countertop must be maintained.

WIDTH:

Panel width must be 23-3/4"

- If the panel width is less than 23-3/4", it will not cover the dishwasher frame.

Custom accessories

ZTB700 tubular handle*

Install this Monogram stainless steel tubular handle onto your 3/4"-thick custom door panel. The handle is 22-1/2" wide and 1-1/8" deep. For models ZBD9900RII, ZBD8900VII/ZBD8900DII and ZBD6900VII/ZBD6900DII only.

ZPRO0700S Professional-style door panel

This panel provides a Professional-style handle on a stainless steel door panel. Transform the ZBD8900 or the ZBD6900 to complement a commercial-style kitchen.

Standard flush installation

- Model ZBD8900 and ZBD6900 dishwashers have a total depth of 24-3/4," including the required 3/4"-thick door panel. They will install flush with cabinets that are 24-3/4" deep (including typical 3/4"-thick cabinet doors).

* Order this handle through GE parts