## Refrigeration modules

### Double-drawer refrigerator general features

**Temperature control.** Digital touch controls maintain a consistent temperature for the upper and lower drawers, and an LED display allows you to monitor the temperature at a glance.

**Storage convenience.** A fold-down shelf, adjustable dividers and removable bottom-drawer bin maximize storage space and flexibility, allowing room for everything from whole melons to large turkeys. The top drawer can hold up to 72 twelve-ounce cans, and the bottom drawer has room for eight two-liter bottles.

**Interior lighting.** Brilliant full-width LED lighting in both drawers puts contents into clear view.

**Flush installation.** The built-in configuration allows near-seamless integration with surrounding cabinetry. Model ZIDI240WII accepts custom 3/4" panel and handle for a personalized look.

For additional details on product installation, warranty coverage, care and maintenance, visit monogram.com.

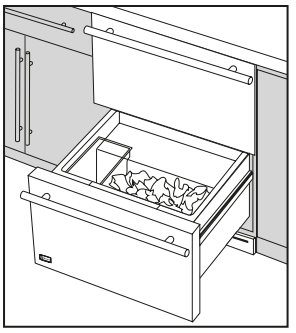

### Double-drawer refrigerator

**ZIDS240WSS—Stainless steel**
**ZIDI240WII—Custom panel**

| Overall dimensions* (WxHxD in inches): 23-3/4 x 34-1/4–34-3/4 x 23-3/4 | |
|---|---|
| Amps @120 Volts | 15 |
| Approx. shipping wt. (lbs.) | 126 |

- Designed to be built-in only; cannot be used free-standing
- Factory-installed black toekick; stainless toekick included
- Trimmed model designed to be customized with custom panel and handle
- Both designs can be installed flush in standard 24"-deep cabinets

*Height excluding legs, depth excluding handle

## Advance planning for double-drawer refrigerator

### The installation space

The Monogram® double-drawer refrigerator must be installed below a countertop. It cannot be used free-standing.

**Note:** When installed, model ZIDI240WII with 3/4" custom drawer panels and model ZIDS240WSS with stainless steel-wrapped drawers will be flush with adjacent 24"-deep cabinets.

### ZKDP240 Professional door with handle

This panel provides a Professional-style handle on a stainless steel door panel. Transform the ZIDI240WII to complement a commercial-style kitchen.

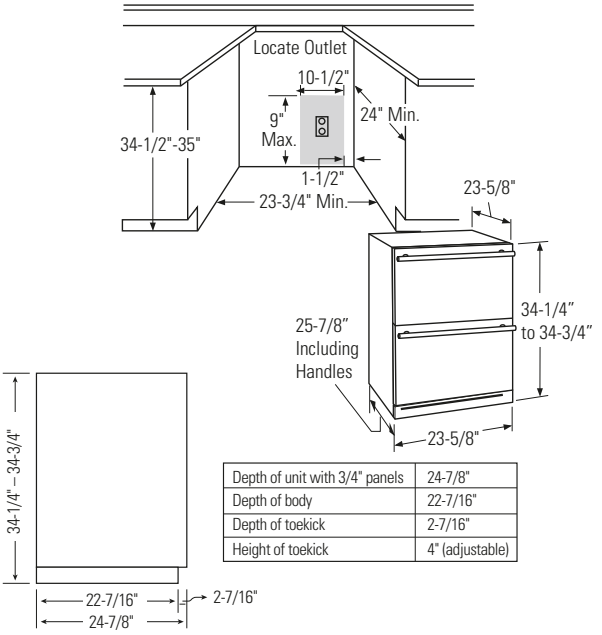


| | |
|---|---|
| Depth of unit with 3/4" panels | 24-7/8" |
| Depth of body | 22-7/16" |
| Depth of toekick | 2-7/16" |
| Height of toekick | 4" (adjustable) |

# Advance planning for double-drawer refrigerator

## Location requirements

All Monogram refrigeration modules may be closed in on the top and sides as long as the front is unobstructed for air circulation.

- Do not install these products where the temperatures will go below 55°F (13°C) or above 90°F (32°C).
- Do not install where they will be subject to direct sunlight, heat or moisture.
- These products are not designed to be stacked one over the other.

**Electrical**

A 120V, 60HZ., 15- or 20-amp power supply is required. An individual properly grounded branch circuit or circuit breaker is recommended. Install a properly grounded 3-prong electrical receptacle recessed into the back wall of the installation opening. See cutout illustration.

The serial plate is located below the bottom drawer liner on the left side.

**Note:** GFCI (ground fault circuit interrupter) is not recommended.

## Side-by-side installation

For the ultimate in convenience, install two double-drawer refrigerators together.

- Products must operate from separate properly grounded receptacles.

## 3/4" custom panels for double-drawer refrigerator

Field-installed overlay drawer panels are required for model ZIDI240WII.

- The overlay panel must be secured to a 1/4"-thick backer panel that slides into the drawer trim. A 0.10"-thick spacer panel must be placed between the overlay and backer panel.
- Custom handles of your choice must be installed onto the assembled overlay panels.

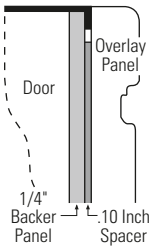


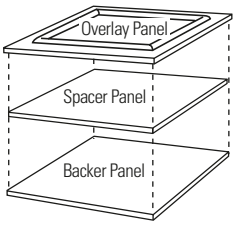


Maximum assembled panel weight is 25 pounds (12-1/2 pounds for each panel).

**3/4" overlay panel dimensions (in inches)**

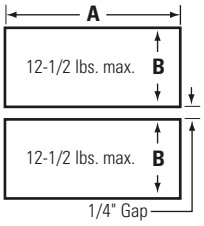


| | A (width) | B (height) |
|---|---|---|
| 1/4" backer | 23-3/16" | 14-11/16" |
| 0.10" spacer | 22-1/2" | 14-3/16" |
| 3/4" overlay | 23-5/8" | 15-1/16" |

**Note:** Maintain 1/4" gap between the drawer panels.

Assemble overlay panels with glue and screws.

- Center spacer panel on the backer panel, left to right, and top to bottom. Secure the panels with glue.
- Center the spacer/backer panel on the overlay panel. Secure with glue and screws. Countersink all screws.