Fully integrated dishwasher

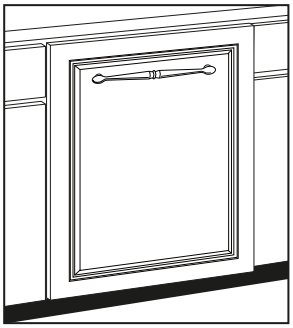

Fully integrated dishwasher

ZBD9900RII

Overall dimensions (WxHxD in inches): 24 x 34 x 24	
Amps @120 Volts	15
Approx. shipping wt. (lbs.)	120

- A custom panel and handle are required
- Accepts custom toekick
- Accepts European-style door/panel handle kit, ZXSS9900

Fully integrated dishwasher general features

Fully integrated design. Designed to install perfectly flush with 24" inset cabinetry when fitted with a stainless steel European-style or custom panel.

European wash system. Ultrafine filtration, including a power zone for the cutlery rack, ensures every dish and utensil is thoroughly cleaned while using minimal water and energy.

Extra-large, stainless steel interior. Height-adjustable rack provides the space and loading flexibility to accommodate up to 14 place settings.

ENERGY STAR

All Monogram® dishwashers meet ENERGY STAR® guidelines for energy efficiency and water conservation.

Advance planning for fully integrated dishwasher

The Monogram® fully integrated dishwasher is designed to install perfectly flush with 24" inset cabinetry when fitted with a stainless steel or custom panel.

Supplied or custom toekick

- Depending on cabinetry style, a custom toekick can also be installed to match cabinetry. Care must be taken to assure door swing clearance above toekick. Maximum custom toekick height is 6".

Electrical requirements

The dishwasher must be supplied with 120V, 60Hz, and connected to an individual properly grounded branch circuit protected by a 15 amp circuit breaker or time-delay fuse.

Dimensions and Specifications (in inches)

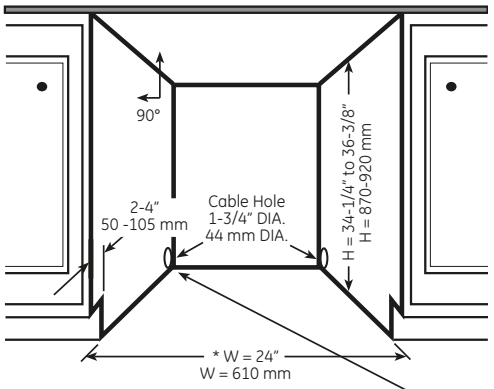

* Actual width of Dishwasher allows for installation in a 23-5/8" wide cutout. If optional Stainless Steel door panel (ZXSS9900) is used, the cutout ***MUST*** be 24".

Make sure the edges of the cable hole are even to avoid damage to the drain and supply hoses and the electric cable.

NOTE: *A 24" cutout may require additional trim for a finished appearance.*

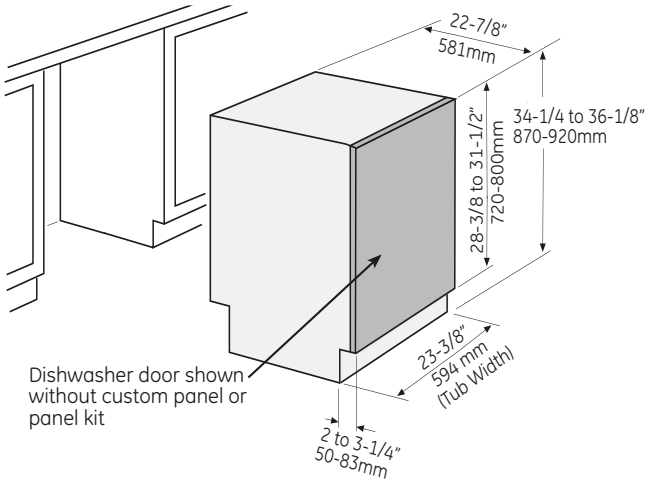

Custom Panel for Model ZBD9900RII

These dishwashers require a 3/4"-thick custom panel and custom handle which should be installed before the unit is mounted to the cabinet. An installation template is packed with the model and can be obtained in advance. Order Pub. No. 31-30269. Complete panel installation instructions are included on the template.

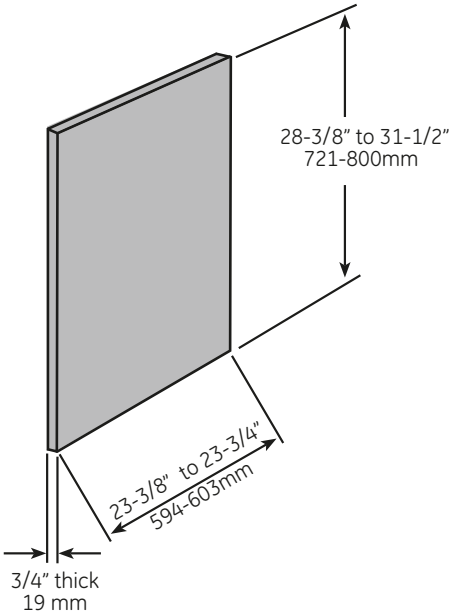

Custom panel size requirements

- Panel height must be 28-3/8" MIN. and 31-1/2" MAX to accommodate different toekick heights
- Max. panel width cannot exceed cutout dimensions less 1/8" (2.5mm) reveal on each side
- Springs shipped with unit can handle panel weight up to 15 lbs. Panels weighing 15-19 lbs.: order one accessory spring. Panel weight: up to 15 lbs. Up to 19 lbs. with accessory spring WD01X10445. If panel weight is over 19 lbs, order two of the accessory spring kits, WD01X10445.

IMPORTANT: The custom panel must not obstruct the fan exhaust vent; otherwise, moisture from the vent could eventually damage the panel and create drying problems.

Corner Installation: If the dishwasher is installed in a corner, there must be a minimum clearance of 2" (50mm) from the side wall so the door can open.